SPRAYMASTER *signature* SERIES

DEAERATORS (Single Tank)

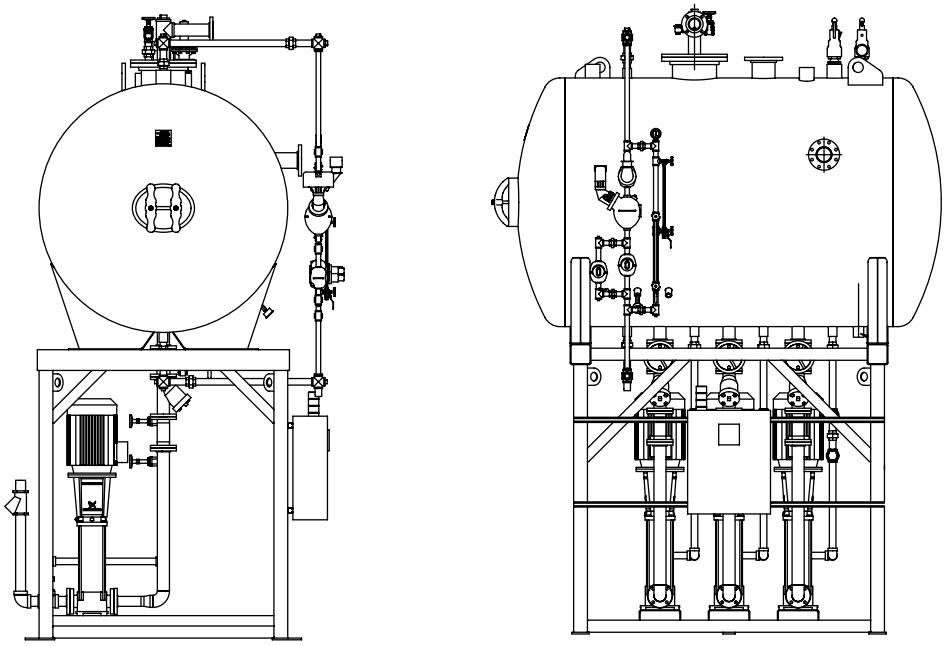

Dimensions and Ratings

Figure 1a. Spraymaster Signature *Deaerator Dimensions and Ratings (Single Tank) - Sheet 1 of 2*

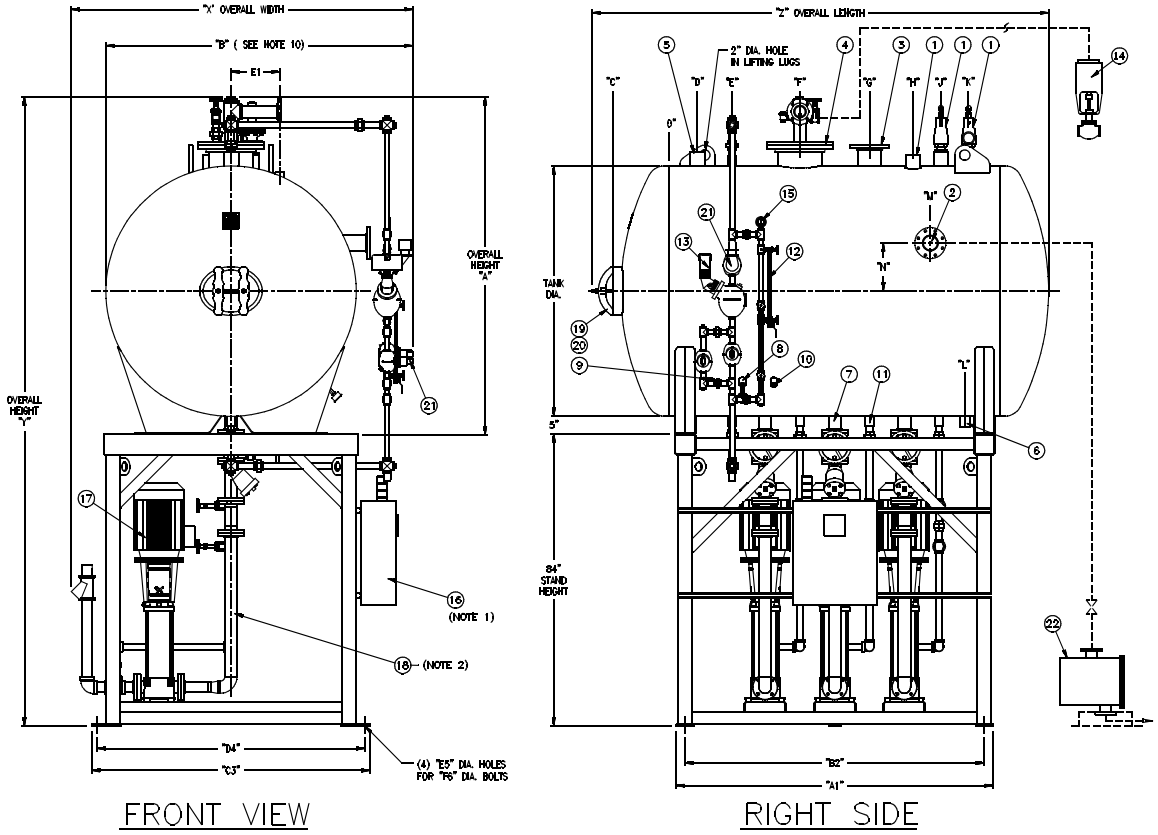

NOTE:

1. Packaged units only. Mounted on side of stand.
2. Suction piping includes strainer, gate valve and flexible connector.
3. All couplings are 3000# F.S.
4. All flanges are 150# F.F. except as noted.
5. Customer to plug all fittings not being used.
6. Mount tank above pump at elevation necessary for static head including safe allowance for piping friction as approved by pump manufacturer.
7. Deaerator tank is built to ASME Code.
8. Accompanying dimensions, while sufficiently accurate for layout purposes, must be confirmed for construction by certified dimension prints.
9. Add Suffix "P" to Model No. for packaged units (SSP-45).
10. Dimension "B" will change depending on controls required – contact your local Cleaver-Brooks authorized representative.
11. No interconnecting piping or wiring furnished on non-packaged units unless specified, contact your local Cleaver-Brooks representative for specific piping or wiring furnished on packaged assemblies.
12. Weights shown are without controls or packaging – contact your local Cleaver-Brooks representative for additions.
13. Capacities other than shown as standard available by proper selection of controls – contact your local Cleaver-Brooks authorized representative.
14. Optional tank sizes and ratings available – contact your local Cleaver-Brooks authorized representatives.
15. Lifting lugs are for lifting EMPTY tanks only.
16. For Zone IIB Stand dimensions – contact your local Cleaver-Brooks authorized representative.

RATINGS	TANK SIZES						
Capacity (Gal. to Overflow)	260	415	610	840	1105	1400	2485
Tank Size (Dia x Length)	48 x 75	48 x 115	54 x 117	60 x 119	66 x 121	72 x 123	84 x 152
Tank Weight (Dry) (lb)	1400	1800	2100	2400	2900	3200	4200
Package Weight (Total Dry)(lb)	4500	5600	6750	7200	7600	8100	11,100
Package Weight (Total Flooded) (lb)	6900	9250	12050	14,450	17,100	20,000	29,700

RATINGS FOR SPRAYMASTER MODEL	Conn. 3 Steam Inlet	Conn. 4 Water Inlet
SS-7	6"-150# FF Flg	1" NPT.
SS-15	6"-150# FF Flg	1.5"-150# RF Flg
SS-30	6"-150# FF Flg	2"-150# RF Flg
SS-45	6"-150# FF Flg	2"-150# RF Flg
SS-70	6"-150# FF Flg	2.5"-150# RF Flg
SS-100	6"-150# FF Flg	3"-150# RF Flg

Manual Vent Valve Size	
SS7	0.75
SS15	0.75
SS30	0.75
SS45	0.75
SS70	1
SS100	1.5

Figure 1b. Spraymaster Signature *Deaerator Dimensions and Ratings (Single Tank) - Sheet 2 of 2*

OVERALL DIMENSIONS (TANK AND STAND)								
	Capacity (Gal. to Overflow)	260	415	610	840	1105	1400	2485
X	Overall Package Width	81	81	95	98	101	99	117
Y	Overall Package Height	157	157	163	169	175	181	205
Z	Overall Package Length	87	123.5	125	127.5	129.5	131.5	160.5

TANK DIMENSIONS								
A	Overall Tank Height	73	73	80	85	91	97	109
B	Overall Tank Width	70	68	70.5	76.5	82.5	88.5	100.5
C	Front Head	12.31	12.31	13.13	14.37	15.44	16.31	18.81
D	High Temperature Return	48	8	8	8	8	8	20
E	Level Control	9	18	18	18	18	18	30
E1	Level Control	14	N/A	N/A	N/A	N/A	N/A	N/A
F	Water Inlet	17.5	37.5	37.5	37.5	37.5	37.5	49.5
G	Steam Inlet	37.5	57.5	57.5	57.5	57.5	57.5	69.5
H	Relief Valve	48	70	70	70	70	70	82
J	Relief Valve	N/A	78	78	78	78	78	90
K	Spare	N/A	86	86	86	86	86	98
	Spare	N/A	N/A	N/A	N/A	N/A	N/A	106
L	Drain	46	85	85	85	85	85	97
M	Overflow	REAR HEAD	75	75	75	75	75	87
N	Overflow	1.56	1.59	4.62	7.62	10.87	13.81	18.25

STAND DIMENSIONS -FOR ZONE IV- see note 16.								
A1	Overall Length	52	91	91	91	91	91	116
B2	C/L to C/L Bolt Holes	47	86	86	86	86	86	110
C3	Overall Width	72.75	72.75	72.75	72.75	78	80	91
D4	C/L to C/L Bolt Holes	68.25	68.25	68.25	68.25	73.5	75.5	86.5
E5	Hole Size	1.37	1.37	1.37	1.37	1.37	1.37	1.37
F6	Anchor Bolt Size	1.25	1.25	1.25	1.25	1.25	1.25	1.25

CONNECTIONS AND TRIM								
1	Relief Valve Size / Quantity	Contact Your Local Cleaver-Brooks Authorized Representative						
2	Overflow Size	3” NPT	3” NPT	3” NPT	3” NPT	4”-150# FF	4”-150# FF	4”-150# FF
3	Steam Inlet Size	6"-150# FF	6"-150# FF	6"-150# FF	6"-150# FF	6"-150# FF	6"-150# FF	6"-150# FF
4	Water Inlet Size	8"-150# FF	8"-150# FF	8"-150# FF	12"-150# FF	12"-150# FF	12"-150# FF	12"-150# FF
5	High Temperature Return Size	1 1/2" NPT	2" NPT	2" NPT	2" NPT	3" NPT	3" NPT	3" NPT
6	Drain Size	2" NPT	2" NPT	2" NPT	2" NPT	2" NPT	2" NPT	2" NPT
7	Suction Size	2.5" NPT	2.5" NPT	2.5" NPT	2.5" NPT	3"-150# FF	3"-150# FF	4"-150# FF
8	Thermometer	3/4" NPT	3/4" NPT	3/4" NPT	3/4" NPT	3/4" NPT	3/4" NPT	3/4" NPT
9	Sample	1/2" NPT	1/2" NPT	1/2" NPT	1/2" NPT	1/2" NPT	1/2" NPT	1/2" NPT
10	Chemical Feed	1" NPT	1" NPT	1" NPT	1" NPT	1" NPT	1" NPT	1" NPT
11	Recirculation	1.5" NPT	1.5" NPT	1.5" NPT	1.5" NPT	1.5" NPT	1.5" NPT	2" NPT
12	Gauge Glass Assembly							
13	Level Controller	1.5" NPT	1.5" NPT	1.5" NPT	1.5" NPT	1.5" NPT	1.5" NPT	1.5" NPT
14	Make-Up Valve							
15	Pressure Gauge	1/4" NPT	1/4" NPT	1/4" NPT	1/4" NPT	1/4" NPT	1/4" NPT	1/4" NPT
16	Control Panel	Per Design	Per Design	Per Design	Per Design	Per Design	Per Design	Per Design
17	Feed Pump/Motor	Per Design	Per Design	Per Design	Per Design	Per Design	Per Design	Per Design
18	Suction Piping	Per Design	Per Design	Per Design	Per Design	Per Design	Per Design	Per Design
19	Manway Size - SSP 15-70	12" x 16"	12" x 16"	12" x 16"	12" x 16"	12" x 16"	12" x 16"	N/A
20	Manway Size - SSP 100	N/A	N/A	N/A	N/A	N/A	N/A	14" x 18"
21	Level Alarms	1" NPT	1" NPT	1" NPT	1" NPT	1" NPT	1" NPT	1" NPT
22	Overflow Drainer	Per Design	Per Design	Per Design	Per Design	Per Design	Per Design	Per Design

Figure 2. Spraymaster Signature *Deaerator Product Offering*

MDEL NO.	RATING (LBS/H)	TANK CAPACITY (GAL)	STORAGE CAP. (MIN)
SS-7	7000	260	10
SS-15	15000	415	10
SS- 30	30000	610	10
SS- 45	45000	1105	10
SS -70	70000	1400	10
SS-100	100000	2485	10

NOTE: Model number designation (example, SM-7) is: SS = Signature Deaerator. 7 = 7,000 lbs/hr rating. Optional tank sizes available, contact your local Cleaver-Brooks authorized representative.

Figure 3. Spraymaster Signature *Tank Supports and Saddles - Details and Dimensions*

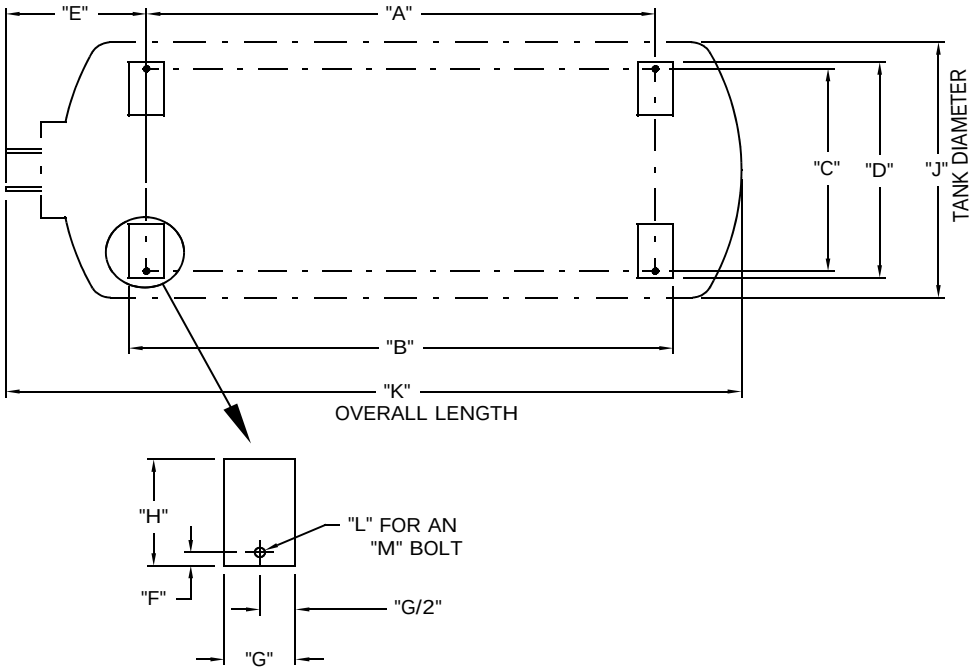

TANK CAPACITY (GALLONS)							
	260	**415**	**610**	**840**	**1105**	**1400**	**2485**
A	47	86	86	86	86	86	110
B	53	92	92	92	92	92	116
C	38	38	44.75	44.75	50	52	62
D	40.5	40.5	47.25	48.25	53	55	65.5
E	22.31	22.78	23.59	24.84	25.91	26.78	29.59
F	1.25	1.25	1.25	1.75	1.5	1.5	1.75
G	6	6	6	6	6	6	6
H	10	10	14.37	16	18.25	21.25	23.12
J	48	48	54	60	66	72	84
L	0.87	0.87	0.87	1.12	1.12	1.12	1.12
M	0.75	0.75	0.75	1	1	1	1

e-mail: info@cleaverbrooks.com
Web: http://www.cleaverbrooks.com